DO NOT SCALE DRAWING

THE INFORMATION CONTAINED HEREIN IS THE EXCLUSIVE PROPERTY OF VIRGINIA PANEL CORP. AND IS SUBMITTED FOR USE BY THE CUSTOMER ONLY. THE DATA SHALL NOT BE DUPLICATED, USED, OR DISCLOSED IN WHOLE OR IN PART FOR ANY PURPOSE OTHER THAN TO MAINTAIN THE EQUIPMENT PROVIDED.

REVISIONS

ZONE	REV	DESCRIPTION	DATE	APPROVED
	B	INCORPORATED ECN #1765	8/21/96	MD

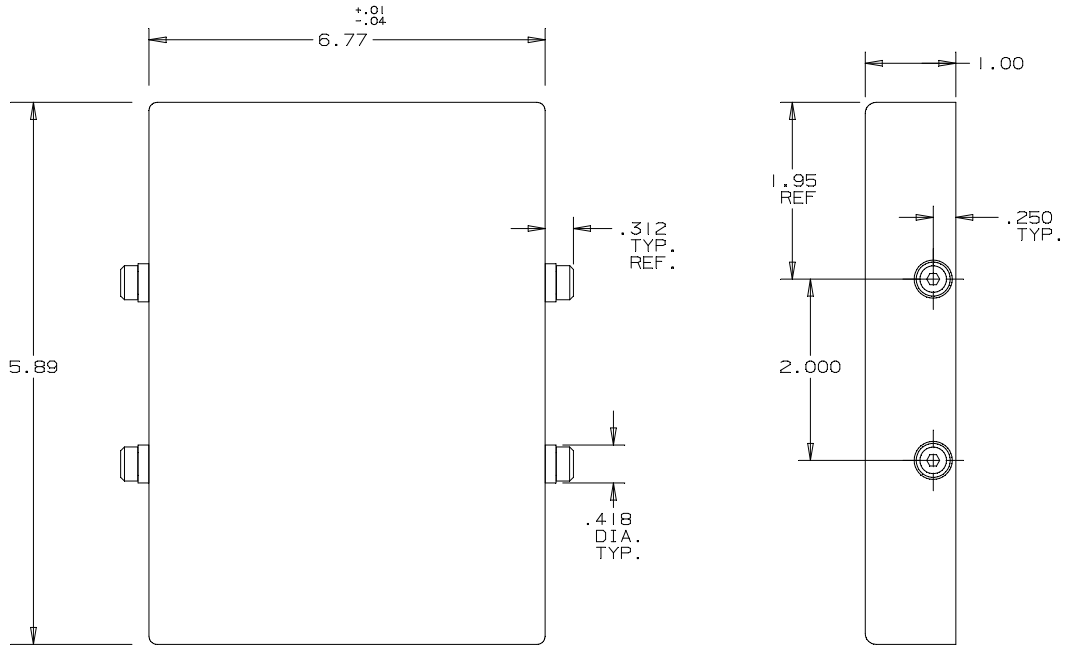

CUSTOMER DRAWING

310113154

FIND NO.	QTY REQD	CODE IDENT	PART NO.	DESCRIPTION	SOURCE OF SUPPLY

PARTS LIST

NEXT ASSY	USED ON
APPLICATION	

DIMENSIONS ARE IN INCHES UNLESS OTHERWISE SPECIFIED.
TOLERANCES ARE:
DEC.XX± .03 FRAC±
.XXX± .010 ANG ± 1°
REMOVE BURRS. BREAK SHARP EDGES
MATERIAL
FINISH

CONTRACT NO.

SIGNATURES		DATE
DR	F MORAN	3/15/91
CHK		
ENG		
APPD		
APPD		

VIRGINIA PANEL CORP.

RCVR COVER F/90 SERIES

SIZE	FSCM NO.	DWG.NO.	REV
C	18117	3916 03 000	B

SCALE:NONE 39160300 8/17/92 SHEET 1 OF 1