DO NOT SCALE DRAWING

THE INFORMATION CONTAINED HEREIN IS THE EXCLUSIVE PROPERTY OF VIRGINIA PANEL CORP. AND IS SUBMITTED FOR USE BY THE CUSTOMER ONLY. THE DATA SHALL NOT BE DUPLICATED, USED, OR DISCLOSED IN WHOLE OR IN PART FOR ANY PURPOSE OTHER THAN TO MAINTAIN THE EQUIPMENT PROVIDED.

REVISIONS				
ZONE	REV	DESCRIPTION	DATE	APPROVED

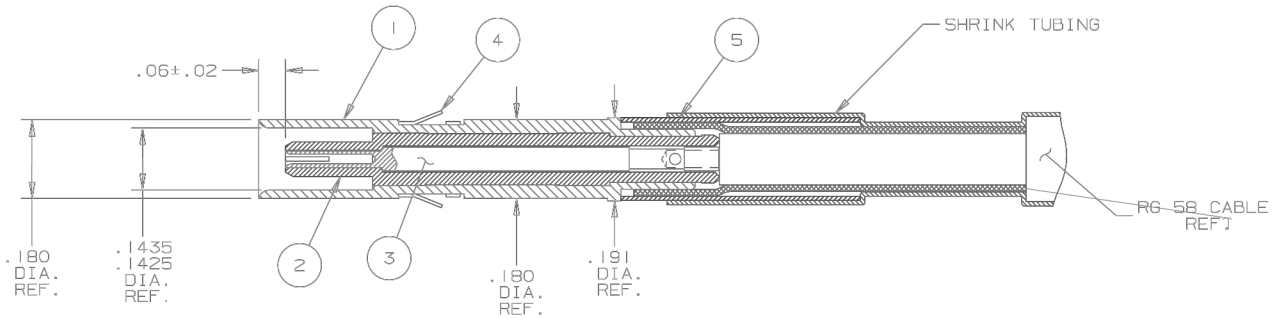

610104154

FIND NO.	QTY REQD	CODE IDENT	PART NO.	DESCRIPTION	SOURCE OF SUPPLY
5	1		4308 08 103	CRIMP RING	
4	1		4148 00 103	RETAINING RING	
3	1		4148 61 101	FEMALE CENTER CONDUCTOR	
2	1		4148 01 102	FEMALE TEFLON SHIELD	
1	1		4148 01 103	FEMALE SHIELD CONDUCTOR	

PARTS LIST

NEXT ASSY	USED ON
APPLICATION	

DIMENSIONS ARE IN INCHES UNLESS OTHERWISE SPECIFIED.
TOLERANCES ARE:
DEC.XX± FRAC±
.XXX± ANG ±
REMOVE BURRS. BREAK SHARP EDGES
MATERIAL
FINISH

CONTRACT NO.		
SIGNATURES		DATE
DR	H. BURGERS	1/12/94
CHK	R. GARMAN	1/12/94
ENG		
APPD	H. BURGERS	1/12/94
APPD		

VIRGINIA PANEL CORP.

FEMALE MINI COAX ASSEMBLY

SIZE	FSCM NO.	DWG. NO.	REV
C	18117	4148 61 000	

SCALE: 5:1 | 41486100 1/12/94 | SHEET 1 OF 1