DO NOT SCALE DRAWING

THE INFORMATION CONTAINED HEREIN IS THE EXCLUSIVE PROPERTY OF VIRGINIA PANEL CORPORATION AND IS SUBMITTEDFOR USE BY THE CUSTOMER ONLY. THE DATA SHALL NOT BE DUPLICATED, USED, OR DISCLOSED IN WHOLE OR IN PART FOR ANY PURPOSE OTHER THAN TO MAINTAIN THE EQUIPMENT PROVIDED. CONSULT WITH VIRGINIA PANEL CORPORATION ENGINEERING IF MORE DETAIL IS REQUIRED.

REVISIONS

REV	DESCRIPTION	DATE	ENGR
B	ECN #16298	11/12/2026	U MORALES

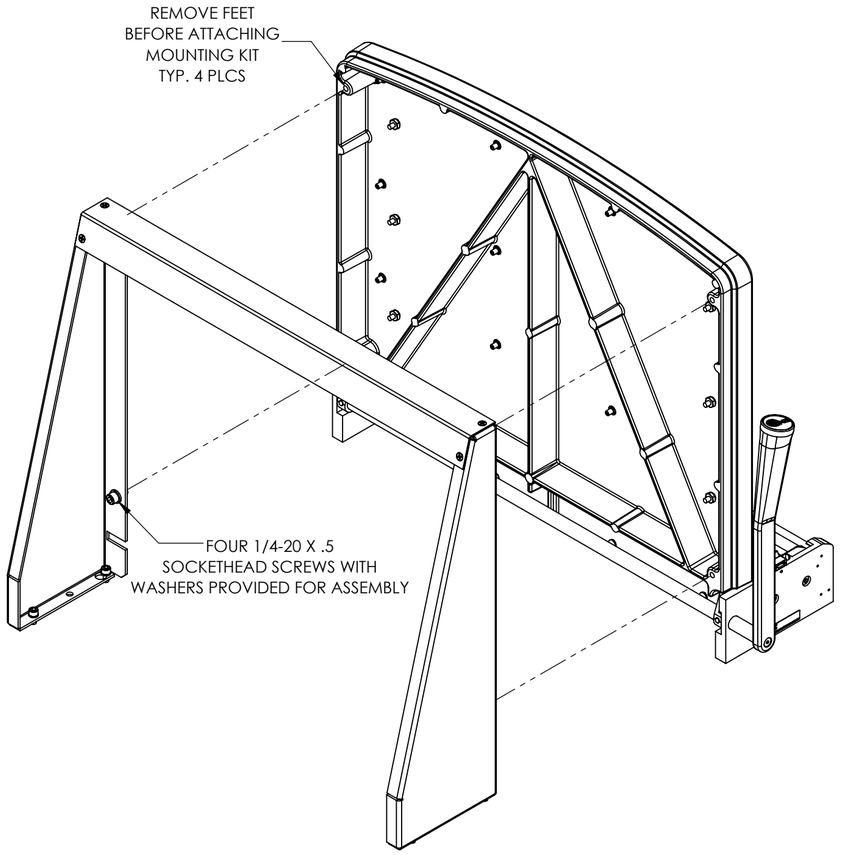

STEP 1

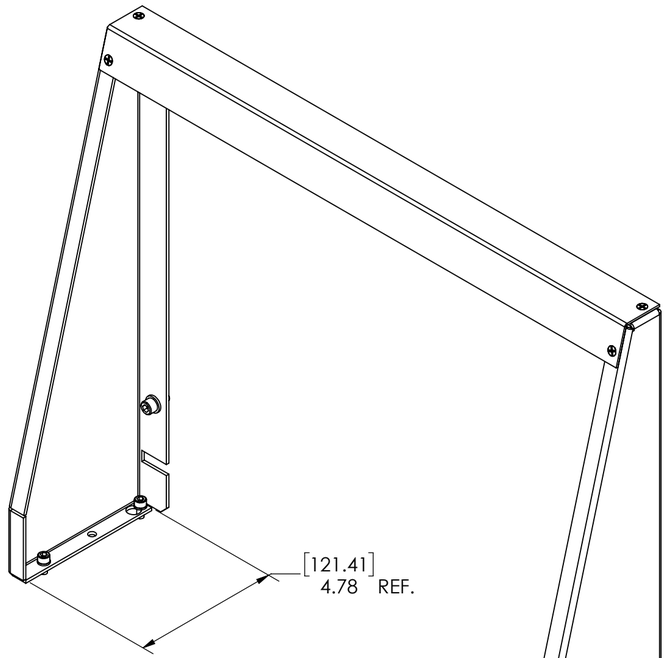

310113511

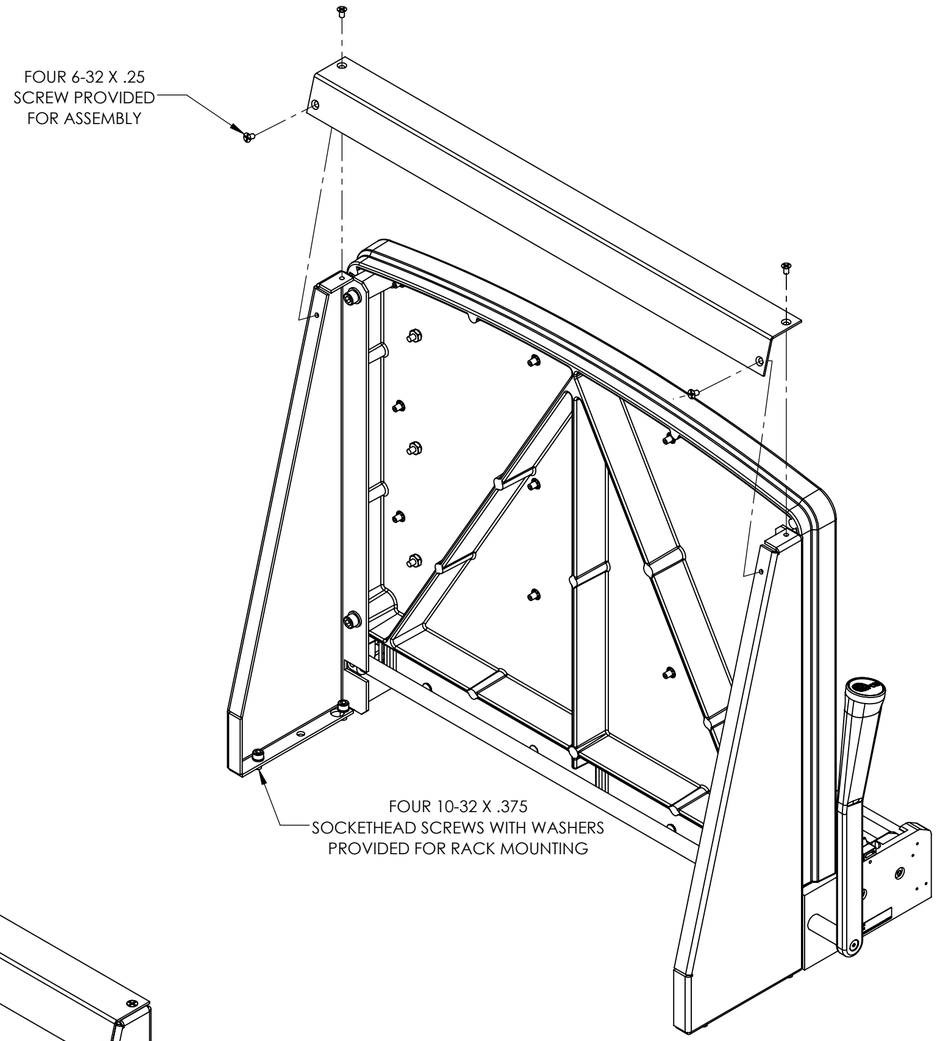

STEP 2

3. RECEIVER SHOWN IS NOT INCLUDED

2. FOR USE WITH RECEIVER P/Ns 310104325 AND 310104386

1. FOR APPLICATION USE & CARE INFORMATION CONSULT VPC USERS GUIDE @WWW.VPC.COM

NOTES:

CUSTOMER DRAWING

VIRGINIA PANEL CORPORATION
WWW.VPC.COM

RCX FX MOUNTING KIT F/15" PLF

DIMENSIONS ARE SHOWN AS:	SIZE	CAGE CODE	DWG.NO.	REV
[MILLIMETERS] INCHES	C	18117	**310113511**	B
	SCALE: NONE	310113511	1/26/09	SHEET 1 OF 1