DO NOT SCALE DRAWING

THE INFORMATION CONTAINED HEREIN IS THE EXCLUSIVE PROPERTY OF VIRGINIA PANEL CORPORATION AND IS SUBMITTEDFOR USE BY THE CUSTOMER ONLY. THE DATA SHALL NOT BE DUPLICATED, USED, OR DISCLOSED IN WHOLE OR IN PART FOR ANY PURPOSE OTHER THAN TO MAINTAIN THE EQUIPMENT PROVIDED. CONSULT WITH VIRGINIA PANEL CORPORATION ENGINEERING IF MORE DETAIL IS REQUIRED.

REVISIONS

REV	DESCRIPTION	DATE	ENGR
E	ECN #12498	4/19/22	M ECKERT

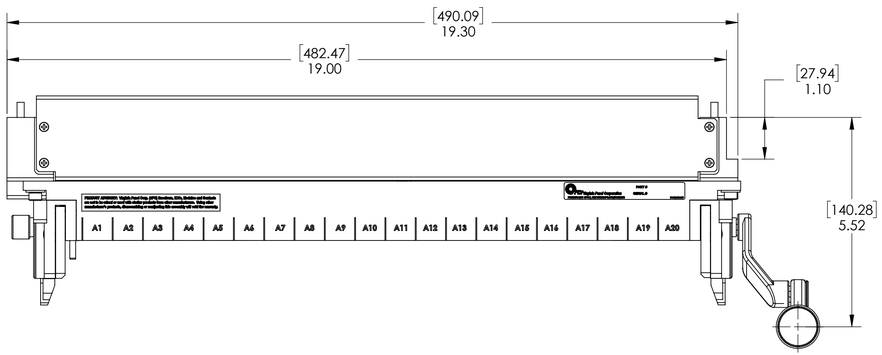

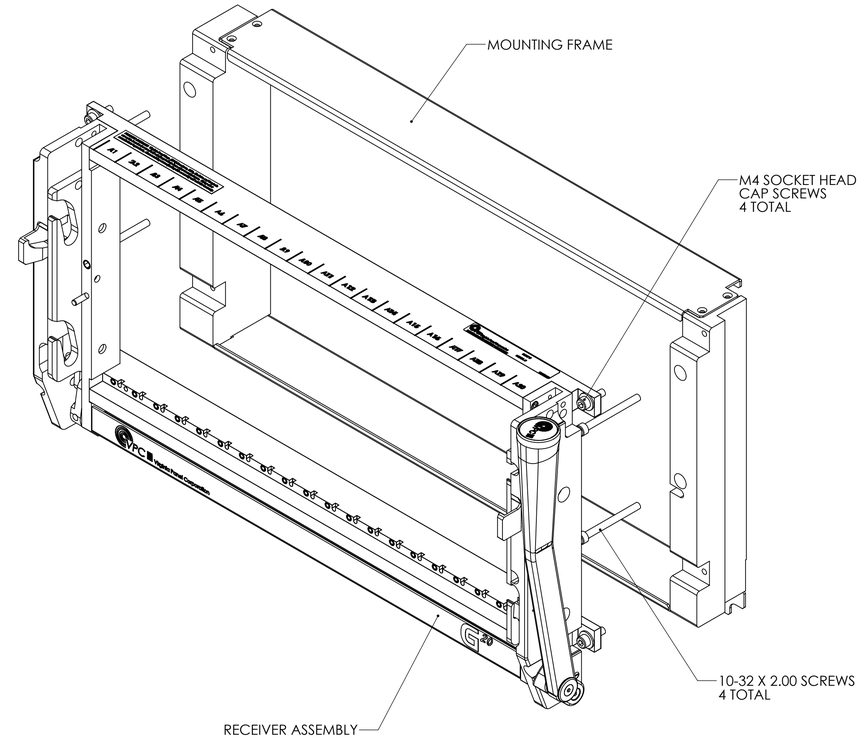

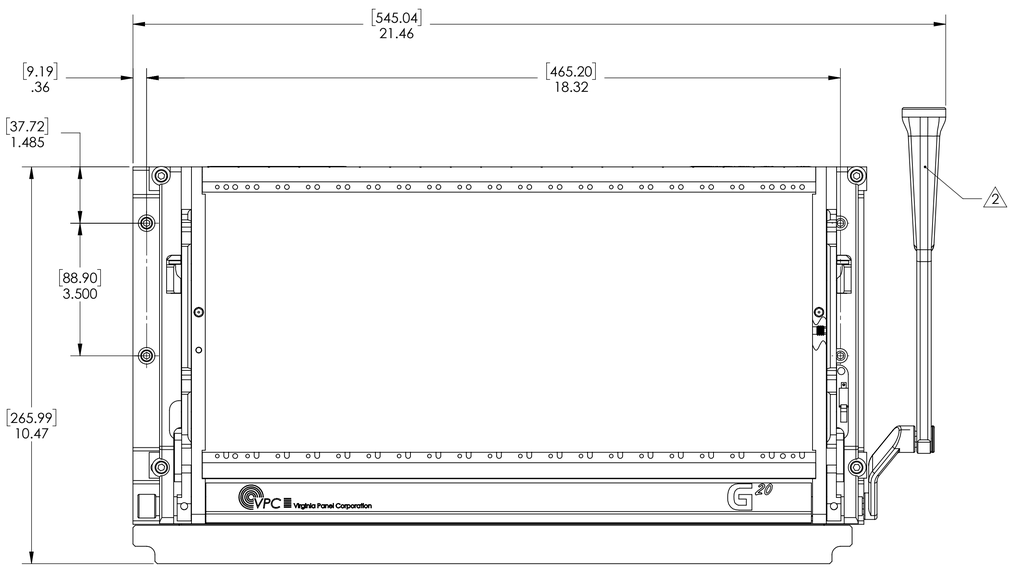

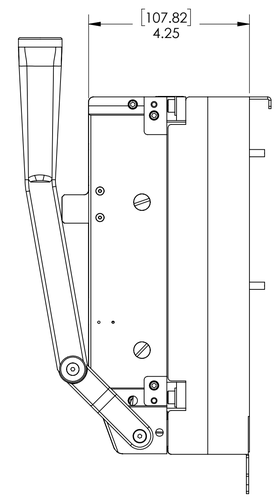

MOUNTING INSTRUCTIONS

SEPERATE THE RECEIVER ASSEMBLY FROM THE MOUNTING FRAME BY REMOVING THE FOUR M4 SOCKET HEAD SCREWS. ATTACH MOUNTING FRAME TO RACK USING THE FOUR 10-32 X 2.00 SCREWS SUPPLIED WITH THE ASSEMBLY. THEN RE-ATTACH THE RECEIVER ASSEMBLY TO THE MOUNTING FRAME.

NOTES:

4. WEIGHT - 13.6 LBS / 6.2 KG
3. FLANGE AND SLIDE KITS ARE SOLD SEPERATELY AND ARE NOT INCLUDED WITH THIS RECEIVER.
2. HANDLE IS REVERSIBLE AND CAN BE REMOVED AND INSTALLED ON THE OPPOSITE SIDE IF DESIRED. SEE USERS MANUAL FOR FULL DETAILS.
1. FOR APPLICATION USE AND CARE INFORMATION CONSULT VPC USERS GUIDE @ WWW.VPC.COM

RELATIVE CONNECTOR POSITIONS AND WIRE ROUTING ARE GENERIC AND MAY VARY WITH PINOUT

DIMENSIONS ARE SHOWN AS: [MILLIMETERS] INCHES

CUSTOMER DRAWING

VIRGINIA PANEL CORPORATION
WWW.VPC.COM

G20 Receiver L/R Handle Slide Mount

SIZE	CAGE CODE	DWG.NO.	REV
D	18117	**310120188**	E

SCALE: 1:2 | 310120188 | 4/9/14 | SHEET 1 OF 1