DO NOT SCALE DRAWING

THE INFORMATION CONTAINED HEREIN IS THE EXCLUSIVE PROPERTY OF VIRGINIA PANEL CORP. AND IS SUBMITTED FOR USE BY THE CUSTOMER ONLY. THE DATA SHALL NOT BE DUPLICATED, USED, OR DISCLOSED IN WHOLE OR IN PART FOR ANY PURPOSE OTHER THAN TO MAINTAIN THE EQUIPMENT PROVIDED. CONSULT WITH VIRGINIA PANEL CORPORATION ENGINEERING IF MORE DETAIL IS REQUIRED.

REVISIONS

ZONE	REV	DESCRIPTION	DATE	APPROVED
	M	ECN #14367	7/16/24	R HERRON

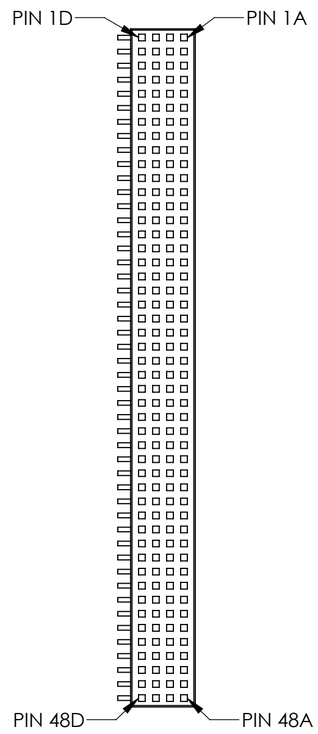

MATING CONNECTOR VIEW

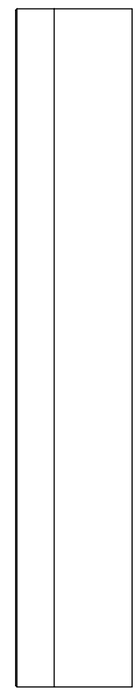

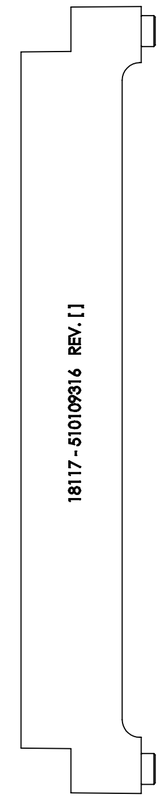

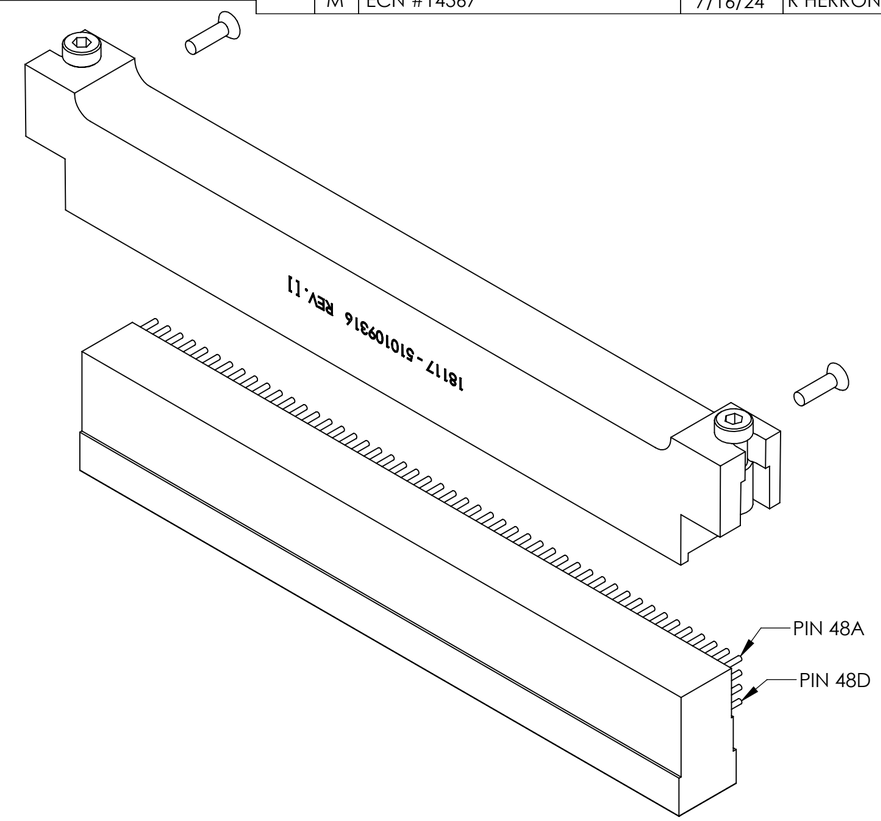

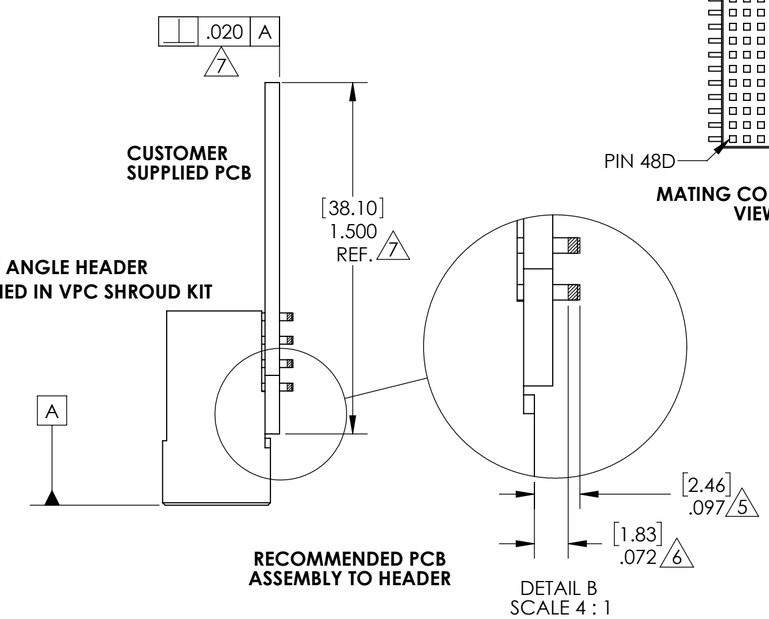

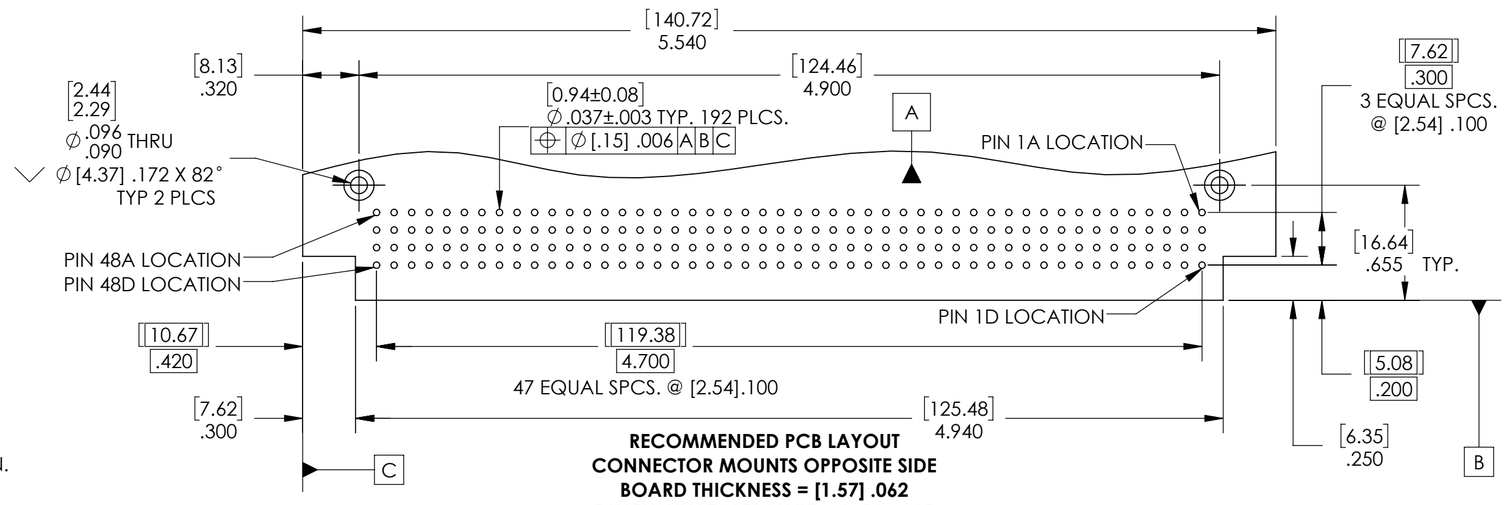

RECOMMENDED PCB LAYOUT
CONNECTOR MOUNTS OPPOSITE SIDE
BOARD THICKNESS = [1.57] .062
DIMENSION TOLERANCE = ±[.13] .005
UNLESS OTHERWISE SPECIFIED

7 .020 PERPINDICULARITY TOLERANCE APPLIES TO A TOLERANCE ZONE OF [38.10] 1.500 AS SHOWN. CALCULATE TOLERANCE ACCORDINGLY FOR VARYING BOARD HEIGHTS.

6 IF APPLICATION REQUIRES THE USE OF MULTIPLE PCB ADAPTORS AND THEY ARE INSTALLED SIDE BY SIDE IN THE ITA, A POST SOLDER TRIMMING OPERATION IS REQUIRED TO SHORTEN THE TAILS IN ORDER TO ELIMINATE INTERFERENCE BETWEEN ADJACENT ADAPTORS; TRIM TAILS TO LENGTH SHOWN (DIMENSION REPRESENTS MAXIMUM LENGTH AFTER TRIMMING) AND TRIM IN ACCORDANCE WITH IPC-A-610 STANDARD SECTION 6.5.1

5 APPROXIMATE TAIL LENGTH AS SUPPLIED BY VPC

4 ALL NECESSARY HARDWARE FOR ASSEMBLY SUPPLIED IN KIT

3 CUSTOMER PCB MUST BE MANUFACTURED WITH (HEADER) INSTALLATION AREA COMPLYING TO RECOMMENDED PCB LAYOUT

2 MATERIALS:
HARDWARE: STAINLESS STEEL SCREWS
SHROUD: ABS PLASTIC OR EQUIVALENT
HEADER - INSULATOR: GLASS FILLED PET BLACK THERMOPLASTIC
CONTACT: PHOSPHOR BRONZE ALLOY
CONTACT PLATING IN MATING AREA: .00003 in. Au OVER .00005 in. Ni

1 FOR APPLICATION, USE & CARE INFORMATION CONSULT VPC USERS GUIDE @WWW.VPC.COM

NOTES:

CUSTOMER DRAWING - CUSTOMER DRAWING

SOLIDWORKS DRAWING FILE

DIMENSIONS ARE SHOWN AS: (millimeters) INCHES

REMOVE BURRS. BREAK SHARP EDGES

MATERIAL 2

FINISH

SIGNATURES		DATE
DR	R. HERRON	7/22/03
CHK	M DOLFI	7/23/03
ENG		
PROD		
ASSY		
Q A		
APPD		

VIRGINIA PANEL CORPORATION
WWW.VPC.COM

192 POSTION QUADRAPADDLE ITA
RIGHT ANGLE HEADER/SHROUD KIT

SIZE	FSCM NO.	DWG.NO.	REV
C	18117	510109316	M

SCALE: NONE | 7/22/03 | 510109316 | SHEET 1 OF 1