DO NOT SCALE DRAWING

THE INFORMATION CONTAINED HEREIN IS THE EXCLUSIVE PROPERTY OF VIRGINIA PANEL CORPORATION AND IS SUBMITTEDFOR USE BY THE CUSTOMER ONLY. THE DATA SHALL NOT BE DUPLICATED, USED, OR DISCLOSED IN WHOLE OR IN PART FOR ANY PURPOSE OTHER THAN TO MAINTAIN THE EQUIPMENT PROVIDED. CONSULT WITH VIRGINIA PANEL CORPORATION ENGINEERING IF MORE DETAIL IS REQUIRED.

REVISIONS

REV	DESCRIPTION	DATE	ENGR
D	ECN #8430	7/25/18	J SHAND

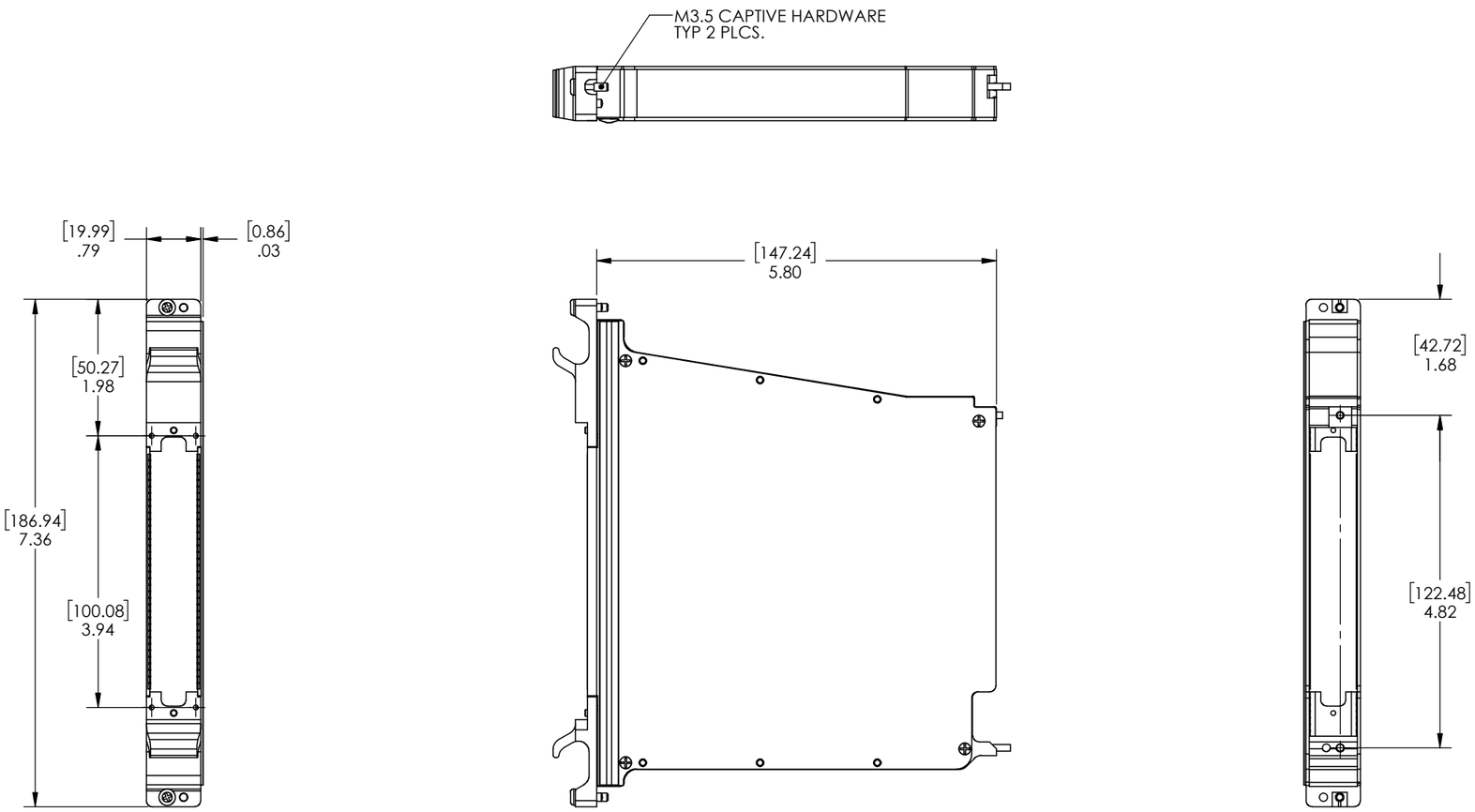

2. MATERIALS:
   TOP AND BOTTOM - NICKEL PLATED ALUMINUM
   SIDE PLATES - PASSIVATED STAINLESS STEEL
   EMI GASKET - NICKEL PLATED BeCu
   HARDWARE - PASSIVATED STAINLESS STEEL

1. FOR APPLICATION USE & CARE INFORMATION CONSULT VPC USERS GUIDE @WWW.VPC.COM

NOTES:

RELATIVE CONNECTOR POSITIONS AND WIRE ROUTING ARE GENERIC AND MAY VARY WITH PINOUT

DIMENSIONS ARE SHOWN AS: [MILLIMETERS] INCHES

CUSTOMER DRAWING

VIRGINIA PANEL CORPORATION
WWW.VPC.COM

PXI ADPTR SINGLE SLOT i2

SIZE	CAGE CODE	DWG.NO.	REV
C	18117	**510109582**	D

SCALE: 3:4 | 510109582 | 3/6/15 | SHEET 1 OF 1